- ALL DOCUMENTS ARE SUBJECT TO CHANGE WITHOUT NOTICE
- PROPERTY OF ARES PHE CAN NOT BE COPIED OR REDISTRIBUTED

CONNECTION TYPES POS.39

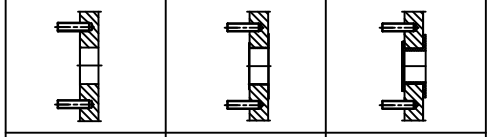

DN300 - FLANGE STUDDED PN10	DN300 - FLANGE SS LINER PN10	DN300 - FLANGE RUBBERLINER PN10

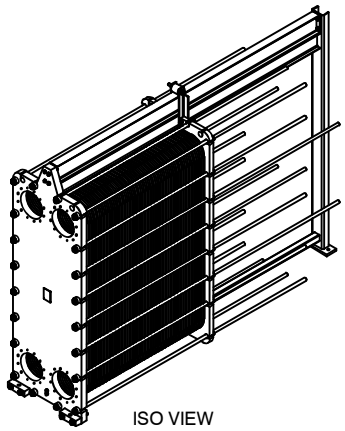

ISO VIEW

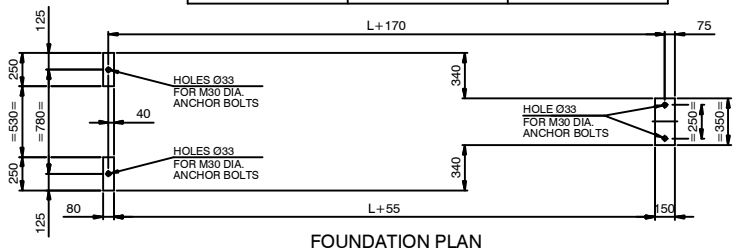

FOUNDATION PLAN

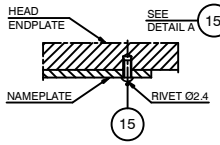

DETAIL A

SCALE: 1/1

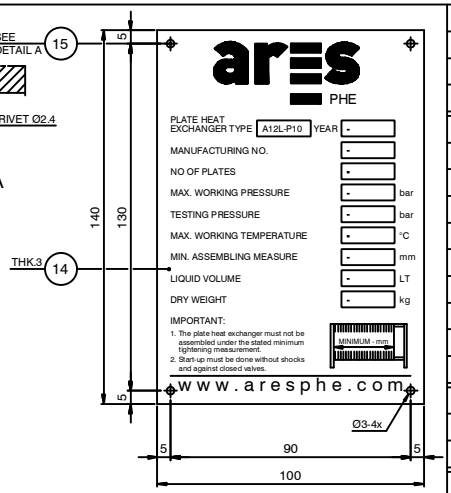

DETAIL NAMEPLATE

SCALE: 1/1

DESIGN DATA

DESIGN ACC. TO	AD 2000 - Merkblatt / PED 97/23/EG		
MEDIUM	-		
CATEGORY	SEP		
OPERATING DATA		HOT SIDE	COLD SIDE
PRODUCT		-	-
TEST PRESSURE (AD2000 / PED)	Barg	- / -	
MIN. / MAX. ALL. PRESSURE (PS)	Barg	- / -	
MIN. / MAX. ALL. TEMPERATURE (TS)	°C	- / -	
CONTENT (V)	L	-	-
HE-SURFACE	m²	-	
WEIGHT NETTO	kg	-	
INLET TEMPERATURE	°C	-	-
OUTLET TEMPERATURE	°C	-	-
LENGTH OF PACK	a_{max}=L1		
	a_{min}=L1		
LENGTH OF CARRY BAR	b=L		

NOZZLE CONNECTIONS

POS	DIR	MEDIA	TYPE	DN
F1	IN	HOT SIDE	-	300
F2	OUT	COLD SIDE	-	300
F3	IN	COLD SIDE	-	300
F4	OUT	HOT SIDE	-	300

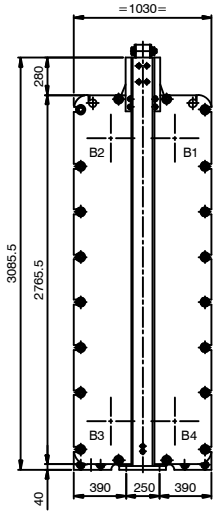

VIEW Q

REAR SIDE
SCALE: 1/20

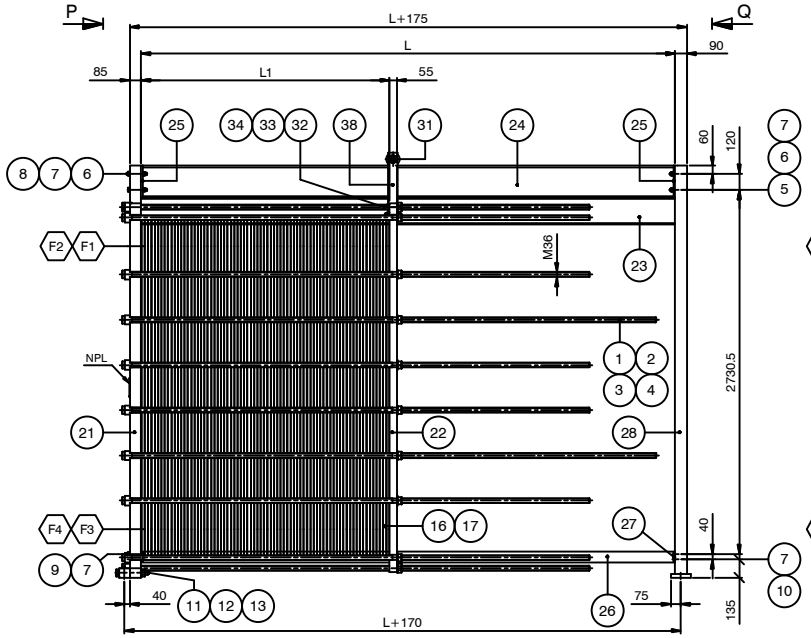

ELEVATION

SCALE: 1/20

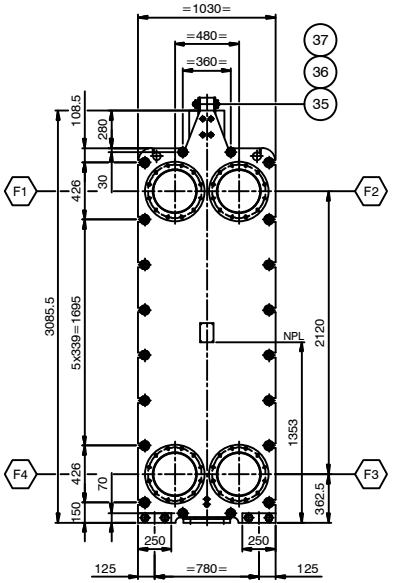

VIEW P

FRONT SIDE
SCALE: 1/20

39	4	NOZZLE CONECTION	-	-	-	3.1
38	2	ANGLE	L75x75x8 L=500	S235JR	-	-
37	2	WASHER	M27	CS	-	-
36	1	HEX. NUT	M27	.8	-	-
35	1	BOLT	M27x170	8.8	-	-
34	8	WASHER	M20	CS	-	-
33	4	HEX. NUT	M20	.8	-	-
32	4	BOLT	M20x100	8.8	-	-
31	1	ROLLER	Ø100 L=106	HARD BLACK PLASTIC	-	-
30	2	PLATE	250x80x70	S235JR	-	-
29	1	BASE PLATE	350x150x25	S235JR	-	-
28	1	SUPPORT COLUMN	3060.5x330x10	S235JR	-	-
27	2	PLATE	70x70x10	S235JR	-	-
26	1	GUIDE BAR (SQUARE TUBE)	80x80x4	S235JR	-	-
25	2	PLATE	240x106x10	S235JR	-	-
24	1	CARRY BAR SUPPORT	IPN 240	S235JR	-	-
23	1	CARRY BAR	IPE 200	S235JR	-	-
22	1	FOLLOWER ENDPLATE	2765.5x1030x55	S355 J2G3	-	3.1
21	1	HEAD ENDPLATE	3085.5x1030x85	S355 J2G3	-	3.1
20	4	FLAT WASHER	M30	CS	-	-
19	4	NUT	M30	.8	-	-
18	4	WEDGE ANCH. BOLT	M30 L=250	8.8	-	-
17	-	GASKET	-	-	-	-
16	-	HE PLATE	-	-	-	3.1
15	4	RIVET	Ø2.4 L=8	SS	-	-
14	1	NAMEPLATE ARES	140x100x3	SS	-	-
13	16	WASHER	M30	CS	-	-
12	8	HEX. NUT	M30	.8	-	-
11	4	BOLT	M30x220	8.8	-	-
10	2	BOLT	M16x30	8.8	-	-
9	2	BOLT	M16x110	8.8	-	-
8	4	BOLT	M16x130	8.8	-	-
7	20	WASHER	M16	CS	-	-
6	8	HEX. NUT	M16	.8	-	-
5	4	BOLT	M16x50	8.8	-	-
4	20	BUSHING	Ø68x35	S235JR	-	-
3	20	LOCK WASHER	Ø70x50	S235JR	-	-
2	40	HEX. NUT	M36	.8	-	-
1	20	DOUBLE-END STUD	M36	8.8	-	3.1
item	qty	description	dimensions	material	remarks	cert

PART LIST

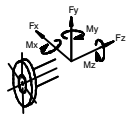

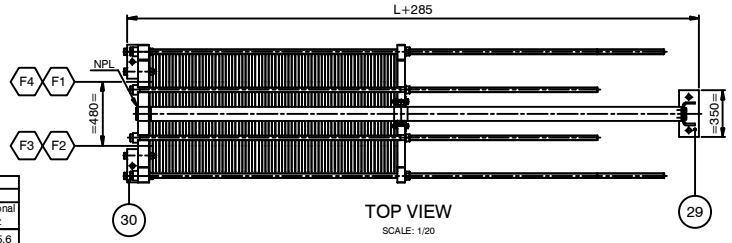

TOP VIEW

SCALE: 1/20

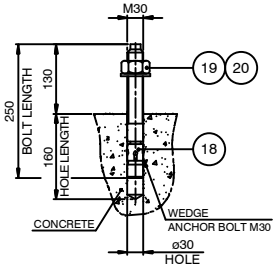

DETAIL ANCHOR BOLT

SCALE: 1/5

MAX. ALLOWABLE FORCES and MOMENTS ON NOZZLES						
NOZZLE	Forces (N)			Moments (Nm)		
	Longitud. Fy	Circum. Fx	Axial Fz	Longitud. Mx	Circum. My	Torsional Mz
F1,F2,F3,F4	1595.9	1595.9	1595.9	2275.6	2275.6	2275.6

NOZZLE LOADS ACCORDING TO API 662, TABLE 1

FOUNDATION LOADS		
	FRONT SIDE (N)	REAR SIDE (N)
DEAD LOAD (DL)	76085.8	27325.3
OPERATING LOAD (DL+NOZZLE LOAD)	86788.2	31644.4

GENERAL NOTES

1. - ALL DIMENSIONS ARE IN mm UNLESS OTHERWISE STATED
2. - FLANGE BOLTHOLES STRADDLE CENTERLINES
3. - NOZZLE FLANGE FACES SMOOTH FINISH 3.2-6.4 um Ra
4. - ROUGHNESS OF GASKETS SURFACE SHALL BE Ra 3.2....6.3 um MAX, UNLESS NOTED OTHERWISE

REFERENCE DRAWINGS & DOCUMENTS

DESCRIPTION	ARES PHE DRAWING
DETAILS	A12L-20010-02
CALCULATION	A12L-20010-00-CAL

REV	DATE	NAME	DESCRIPTION
0	10-07-'12	HE	FOR APPROVAL

Dimensions without tolerance: TOL

ISO projektion

Designed by	Date	Approved by	Date	Rev. no.	Revision Text	Format	Scale
ARES		ARES		0	FOR APPROVAL	A1	1:20+VAR.

ares PHE

Description:
PHE MODEL: A12L PN10 L=2500 ÷ 4000 MM
GENERAL ARRANGEMENT

Rev. date	Rev. by	Drawing no.	Sheet
10-07-'12	HE	A12L-20010-01	1 OF 1