- ALL DOCUMENTS ARE SUBJECT TO CHANGE WITHOUT NOTICE
- PROPERTY OF ARES PHE CAN NOT BE COPIED OR REDISTRIBUTED

DESIGN DATA

DESIGN ACC. TO	AD 2000 - Merkblatt / PED 97/23/EG		
MEDIUM	-		
CATEGORY	SEP		
OPERATING DATA		HOT SIDE	COLD SIDE
PRODUCT		-	-
TEST PRESSURE (AD2000 / PED)	Barg	- / -	
MIN. / MAX. ALL. PRESSURE (PS)	Barg	- / -	
MIN. / MAX. ALL. TEMPERATURE (TS)	°C	- / -	
CONTENT (V)	L	-	-
HE-SURFACE	m²	-	
WEIGHT NETTO	kg	-	
INLET TEMPERATURE	°C	-	-
OUTLET TEMPERATURE	°C	-	-
LENGTH OF PACK	a_{max}=L1		
	a_{min}=L1		
LENGTH OF CARRY BAR	b=L		

NOZZLE CONNECTIONS

POS	DIR	MEDIA	TYPE	DN
F1	IN	HOT SIDE	-	200
F2	OUT	COLD SIDE	-	200
F3	IN	COLD SIDE	-	200
F4	OUT	HOT SIDE	-	200

CONNECTION TYPES POS.38

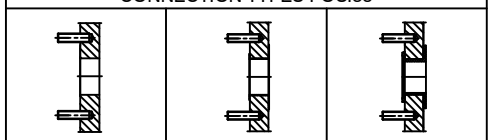

DN200 - FLANGE STUDDED PN10	DN200 - FLANGE SS LINER PN10	DN200 - FLANGE RUBBERLINER PN10

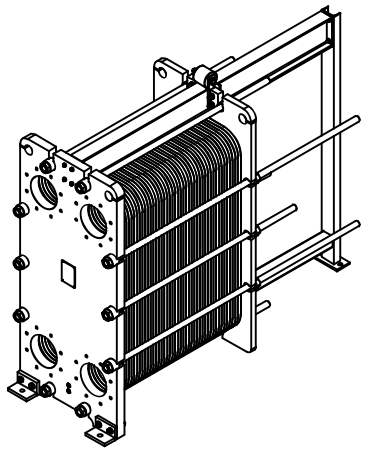

ISO VIEW

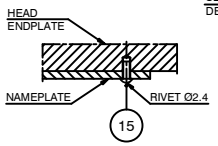

DETAIL A
SCALE: 1/1

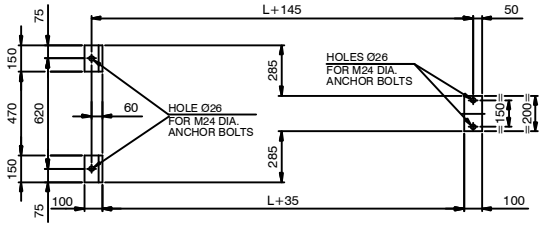

FOUNDATION PLAN

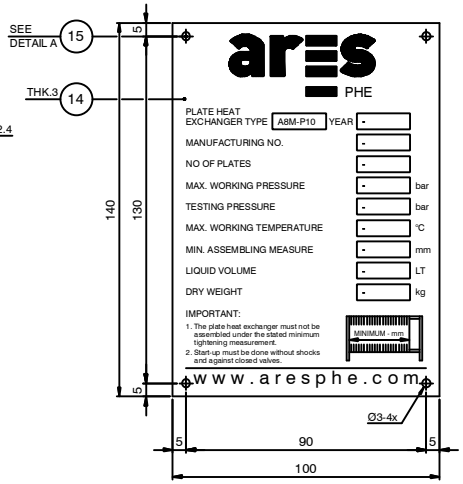

DETAIL NAMEPLATE
SCALE: 1/1

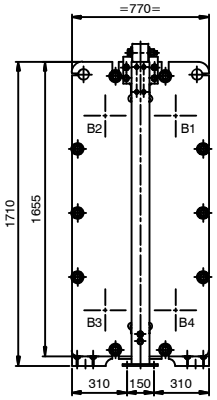

VIEW Q
REAR SIDE
SCALE: 1/15

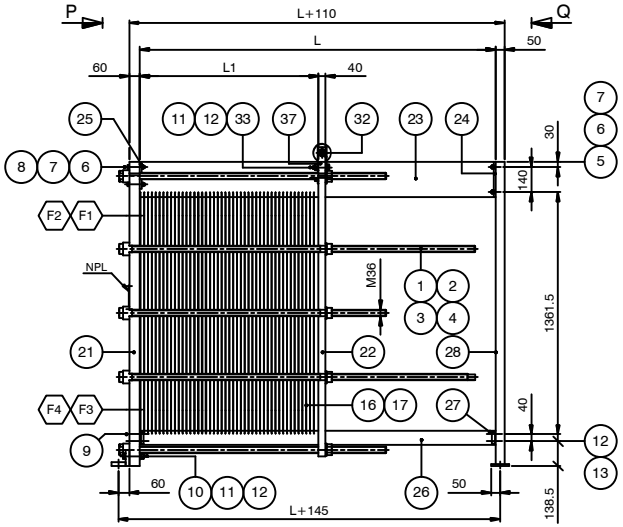

ELEVATION
SCALE: 1/15

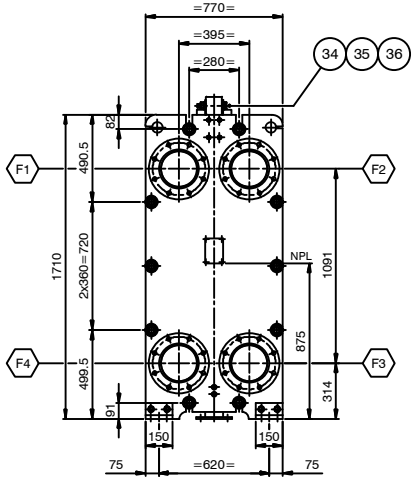

VIEW P
FRONT SIDE
SCALE: 1/15

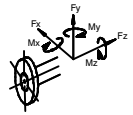

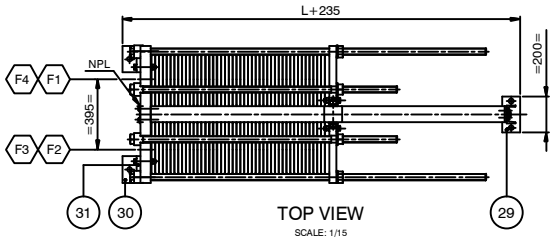

TOP VIEW
SCALE: 1/15

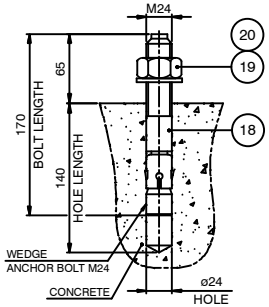

DETAIL ANCHOR BOLT
SCALE: 1/2.5

MAX. ALLOWABLE FORCES and MOMENTS ON NOZZLES						
NOZZLE	Forces (N)			Moments (Nm)		
	Longitud. Fy	Circum. Fx	Axial Fz	Longitud. Mx	Circum. My	Torsional Mz
F1,F2,F3,F4	981.0	981.0	981.0	1170.2	1170.2	1170.2

NOZZLE LOADS ACCORDING TO API 662, TABLE 1

FOUNDATION LOADS		
	FRONT SIDE (N)	REAR SIDE (N)
DEAD LOAD (DL)	18551.6	7681.2
OPERATING LOAD (DL+NOZZLE LOAD)	26230.4	11435.9

GENERAL NOTES

1. - ALL DIMENSIONS ARE IN mm UNLESS OTHERWISE STATED
2. - FLANGE BOLTHOLES STRADDLE CENTERLINES
3. - NOZZLE FLANGE FACES SMOOTH FINISH 3.2-6.4 um Ra
4. - ROUGHNESS OF GASKETS SURFACE SHALL BE Ra 3.2....6.3 um MAX, UNLESS NOTED OTHERWISE

REFERENCE DRAWINGS & DOCUMENTS	
DESCRIPTION	ARES PHE DRAWING
DETAILS	A8M-10010-02
CALCULATION	A8M-10010-00-CAL

PART LIST

item	qty	description	dimensions	material	remarks	cert
38	4	NOZZLE CONECTION	-	-	-	3.1
37	2	ANGLE	50x50x5 L=205	S235JR	-	-
36	2	WASHER	M20	CS	-	-
35	1	HEX. NUT	M20	.8	-	-
34	1	BOLT	M20x150	8.8	-	-
33	4	BOLT	M16x80	8.8	-	-
32	1	ROLLER	Ø100 L=90	HARD BLACK PLASTIC	-	-
31	2	PLATE	150x90x20	S235JR	-	-
30	2	PLATE	150x80x20	S235JR	-	-
29	1	BASE PLATE	200x100x10	S235JR	-	-
28	1	SUPPORT COLUMN	UPN100 L=1700	S235JR	-	-
27	2	PLATE	70x70x15	S235JR	-	-
26	1	GUIDE BAR (SQUARE TUBE)	80x80x4	S235JR	-	-
25	2	PLATE	143x40x10	S235JR	-	-
24	1	PLATE	200x90x10	S235JR	-	-
23	1	CARRY BAR	IPN 200	S235JR	-	-
22	1	FOLLOWER ENDPLATE	1655x770x40	S355 J2G3	-	3.1
21	1	HEAD ENDPLATE	1710x770x60	S355 J2G3	-	3.1
20	4	FLAT WASHER	M24	CS	-	-
19	4	NUT	M24	.8	-	-
18	4	WEDGE ANCH. BOLT	M24 L=170	8.8	-	-
17	-	GASKET	-	-	-	-
16	-	HE PLATE	-	-	-	3.1
15	4	RIVET	Ø2.4 L=8	SS	-	-
14	1	NAMEPLATE ARES	140x100x3	SS	-	-
13	2	BOLT	M16x45	8.8	-	-
12	18	WASHER	M16	CS	-	-
11	8	HEX. NUT	M16	.8	-	-
10	4	BOLT	M16x110	8.8	-	-
9	2	SOCKET HEAD BOLT	M16x80	8.8	-	-
8	4	BOLT	M10x90	8.8	-	-
7	16	WASHER	M10	CS	-	-
6	8	HEX. NUT	M10	.8	-	-
5	4	BOLT	M10x35	8.8	-	-
4	10	BUSHING	Ø68x35	S235JR	-	-
3	10	LOCK WASHER	Ø70x50	S235JR	-	-
2	20	HEX. NUT	M36	.8	-	-
1	10	DOUBLE-END STUD	M36	8.8	-	3.1

REV	DATE	NAME	DESCRIPTION
0	19-08-'12	HE	FOR APPROVAL

Dimensions without tolerance: TOL

ISO projektion

Designed by	Date	Approved by	Date	Rev. no.	Revision Text	Format	Scale
ARES		ARES		0	FOR APPROVAL	A1	1:15+VAR.

ares PHE

Description:
PHE MODEL: A8M PN10 L=600 ÷ 2000 MM
GENERAL ARRANGEMENT

Rev. date	Rev. by	Drawing no.	Sheet
19-08-'12	HE	A8M-10010-01	1 OF 1